TECHNICAL MANUAL

NG SERIES

ICE CUBE MAKERS

MODELS:

NG 30
NG 35
NG 45
NG 60
NG 80
NG 110
NG 150

CAREFULLY READ THE INSTRUCTIONS CONTAINED IN THIS MANUAL SINCE THEY PROVIDE IMPORTANT INFORMATION RELATIVE TO SAFETY DURING INSTALLATION, USE AND MAINTENANCE.

INDEX

1. INTRODUCTION 4

1.1.- Warning 4

1.2.-Reception of the machine 6

2. INSTALLATION 8

2.1.- Placing of the ice maker 8

2.2.-Levelling of the ice maker 9

2.4.-Minimum distance to obstacles 9

2.5.- Water supply connection 10

2.6.-Drain connection 11

2.6.1.- Gravity drain 11

2.6.2.- Drain Force Connection 11

2.5.- Electrical connection 12

3. PRIOR CHECKING AND START-UP 13

3.1.- Prior checking 13

3.2.- Start-Up 13

4. SEQUENCE OF OPERATION 15

4.1. Control Board 17

4.2.- Alarms 18

4.2.1 Safety high pressure switch 19

4.2.2 Long harvest 19

4.2.3 Ice production cycle timeout 19

4.2.4 Faulty temperature probe 19

4.3 PCB push button function 19

4.4 DRAIN FORCE 20

4.4.1 SEQUENCE OF OPERATION 20

4.4.2 CONTROL BOARD 22

5 Refrigeration diagram 23

6 MAINTENANCE AND CLEANING PROCEDURES 24

6.1.- Cleaning water distribution system 24

6.2.- Cleaning water distributor and injectors 27

6.3.- Cleaning the bins 28

6.4.- Cleaning the condenser 29

6.5.- External cleaning of the machine 29

6.6.- Water leakage checking 29

6.7.- MAINTENANCE TABLE 30

7 USER TROUBLESHOOTING GUIDE 31
7.1. general questions 31
7.2. drain force 32
8 TECHNICAL DATA 33

1. INTRODUCTION

Thank you for purchasing a ‘NG’ Ice Cube Maker by ITV. You have purchased one of the most reliable ice-making products on the market today.

Carefully read the instructions contained in this manual since they provide important information relative to safety during installation, use, and maintenance.

1.1.- WARNING

This appliance is intended to be used in professional and similar applications.

The installation of this equipment should be done by the Service Department.

The socket should always be placed on an accessible location.

When positioning the appliance, ensure the supply cord is not trapped or damaged.

Do not locate multiple portable socket-outlets or portable power supplies at the rear of the appliance.

Always disconnect the power supply from the machine before any cleaning or maintenance service.

Any change needed on the electrical installation for the appropriate connection of the machine, should be exclusively performed by qualified and certified professional personnel only.

Any use by the ice maker not intended to produce ice, using potable water, is considered inappropriate.

It is extremely dangerous to modify or intend to modify this machine and will void warranty.

The appliance is not to be used by persons (including children) with reduced physical, sensory or mental capabilities, or lack of experience and knowledge, unless they have been given supervision or instruction.

Children being supervised not to play with the appliance.

Connect to potable water supply only. To see “Installation” chapter (5).

This machine is not intended to be used outdoors nor exposed to the rain.

The machine should be connected using the power cord supplied with the equipment.

It is mandatory to ground the equipment to avoid possible electric shock on individuals or damages to the equipment. The machine should be grounded pursuant local and/or national regulations. The manufacturer shall be held harmless in case of damages arising due to the lack of the ground installation. To see “Installation” chapter (7).

In order to assure the proper operation and efficiency of this equipment, it is extremely important to follow the recommendations of the manufacturer, especially those related to cleaning and maintenance operations, which should be performed by qualified personnel only.

CAUTION: The intervention of non-qualified personnel, besides of being dangerous, could result in serious malfunctioning. In case of damages, contact your distributor. We recommend always using original spare parts.

ITV reserves the right to make changes in specifications and design without prior notice.

This signal indicates “Risk of fire / Flammable materials” because of the use of flammable refrigerant.

For compression-type appliances that use flammable refrigerants should additionally consider the substance of the warnings listed below:

- Keep ventilation openings, in the appliance enclosure or in the built-in structure, clear of obstruction.
- Do not use mechanical devices or other means to accelerate the defrosting process, other than those recommended by the manufacturer.
- Do not damage the refrigerant circuit.
- Do not use electrical appliances inside the food storage compartments of the appliance, unless they are of the type recommended by the manufacturer.
- Do not store explosive substances such as aerosol cans with a flammable propellant in this appliance.

In case of a flammable refrigerant leakage:

- Do not generate flames close to the appliance.
- Do not switch on/off or plug in/off the appliance.
- To ventilate immediately the area where appliance is located by opening doors and/or windows.
- To call to an authorized technical service.

Disposal of the ice maker: ITV encourages to follow the regulations of each country regarding eco-friendly disposal of electric and electronic devices such this one. User who is wanting to

dispose of this equipment must contact the manufacturer and follow the method to appropriate differentiated collection for the subsequent treatments.

1.2.-RECEPTION OF THE MACHINE

Inspect the outside packing. In case of damages, make the corresponding claim to the carrier. To confirm the existence of damages, unpack the machine in the presence of the carrier and state any damage on the equipment on the reception document or freight document.

Always state the machine number and model. This number is printed on three locations:

(1) Packing: On the outside, it contains a label with the serial number.

(2) Exterior of the unit: On the back panel of the unit, there is a label with the same characteristics as the previous one.

(3) Nameplate: On the back of the machine.

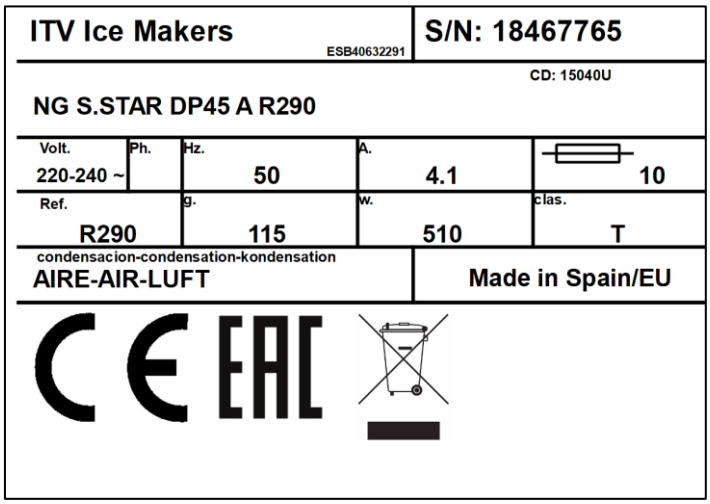

Check that in interior of the machine the installation kit is complete and comprises:

- Ice scoop
- ¾ inlet water hose
- 22 mm drain hose

- 1 filter
- User manual.

Warranty and serial number **CAUTION:** All packing elements (plastic bags, carton boxes and wood pallets) should be kept outside the reach of children, as they are a source of potential hazard.

2. INSTALLATION

2.1.- PLACING OF THE ICE MAKER

This ice maker is not designed for outdoor operation. The icemaker should not be located next to ovens, grills or other high heat producing equipment.

The NG machines are designed to operate at room temperature between 10ºC and 43ºC. There may be some difficulties in ice cube removal under the minimum temperatures. Above the maximum temperature, the life of the compressor is shortened and the production is substantially lower.

The air flow in air-condensed machines enters through the front grille, entering on the right front and exiting on the left front side. In addition, the unit is equipped with a rear air vent. Do not obstruct the front grille with any objects.

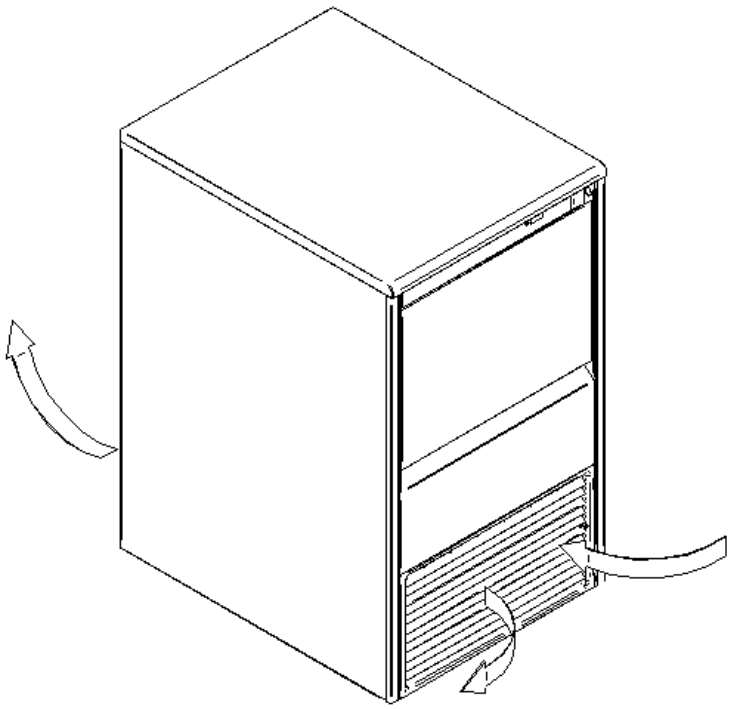

The unit can operate embedded, but with a reduction in output.

In case the front louver is not enough, the exit is either total or partially obstructed or due to its placement it will receive hot air from another device, we recommend, in case it is not possible to change the location of the machine, TO INSTALL A WATER CONDENSER.

IT IS IMPORTANT THAT THE WATER PIPING DO NOT PASS BY OR NEAR SOURCES OF HEAT SO AS NOT TO LOSE ICE PRODUCTION.

The location must allow enough clearance for water, drain and electrical connections in the rear of the ice machine. It is important that the water inlet piping does not pass near sources of heat so as not to lose ice production.

2.2.-LEVELLING OF THE ICE MAKER

Use a level on top of ice machine in order to ensure the equipment is perfectly leveled.

Screw the leveling legs onto the bottom of the ice machine as far as possible.

Move the machine into its final position.

Use a level on top of the ice machine. Adjust each leg as necessary to level the ice machine from front to back and side to side.

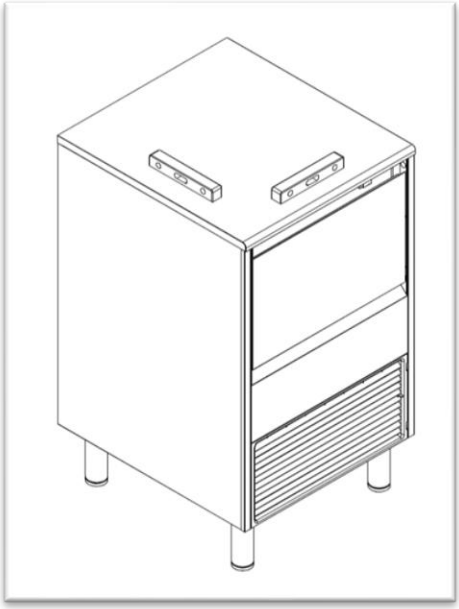

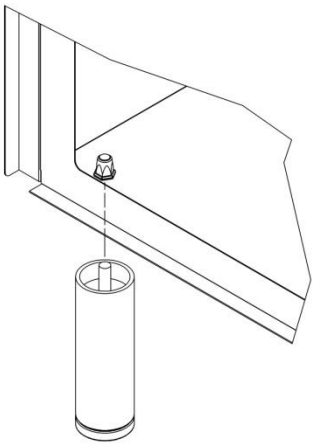

2.4.-MINIMUM DISTANCE TO OBSTACLES

Please see below the recommended minimum distances for proper operation and efficient service.

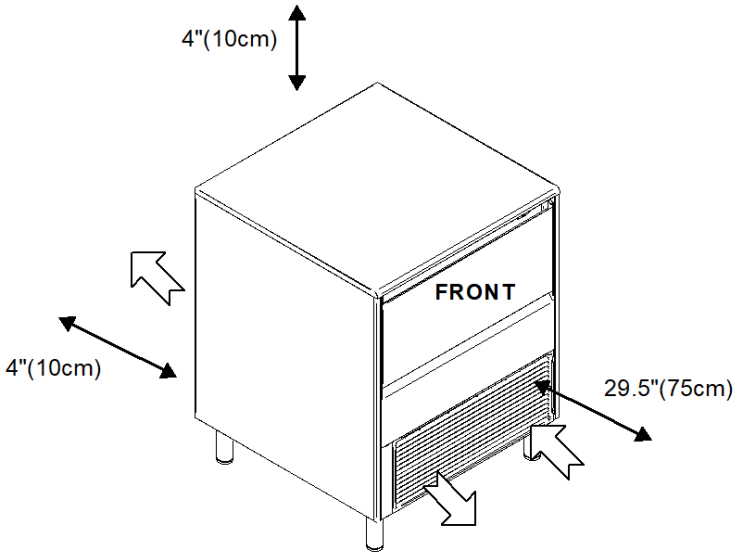

CONNECTION DIAGRAM:

The location must allow enough clearance for water drain and electrical connections in the rear of the ice machine

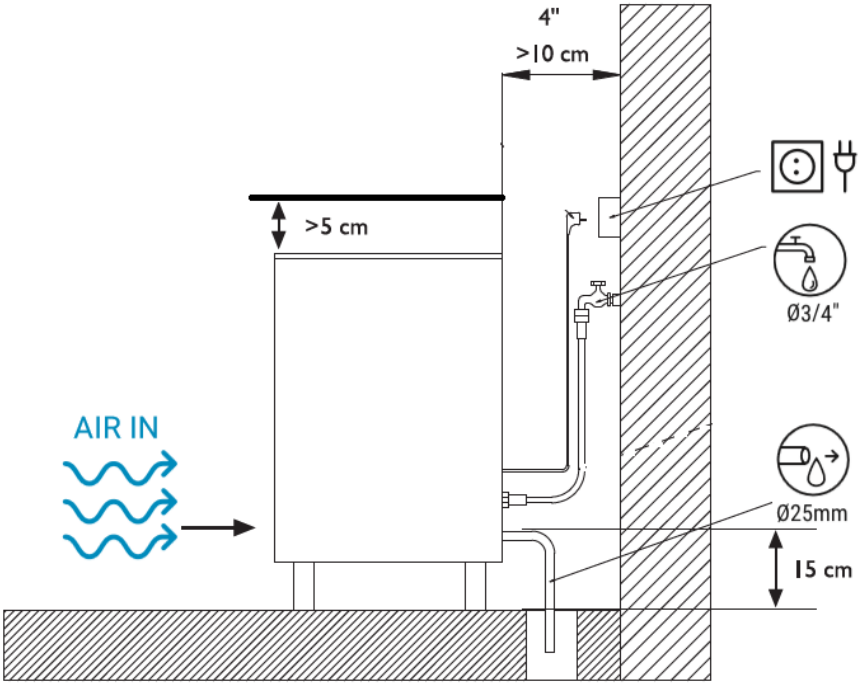

2.5.- WATER SUPPLY CONNECTION

The quality of the water supplied to the ice machine will have an impact on the time between cleanings and ultimately on the life of the product (mainly in water cooled units). It also will have a remarkable influence on the appearance, hardness and flavor of the ice.

Local water conditions may require treatment of the water to inhibit scale formation, improve taste and clarity. If you are installing a water filter system, refer to the installation instructions supplied with the filter system.

Pressure should be between 0.1MPa and 0.6MPa (1 and 6 bar). If pressure overpasses such values, install a pressure regulator.

The water connection needs to be dedicated (only piece of equipment hooked to the water line). Water line from the water valve to the ice machine needs to be ¼" nominal ID tubing.

ATTENTION: The machine shall be plumbed (with adequate backflow protection) according to applicable Federal State and local regulations.

2.6.-DRAIN CONNECTION

2.6.1.- GRAVITY DRAIN

Drainage should be located lower to the machine level, at 150mm minimum.

It is convenient that the drain hose is 1,18" (30mm) inside diameter and with a minimum gradient of 3cm/metre, see figure.

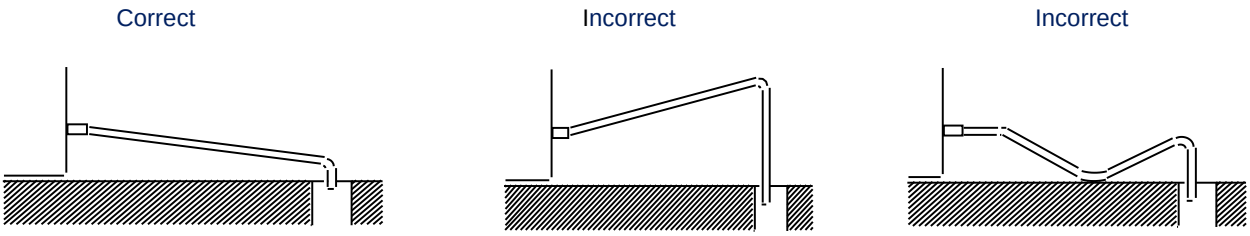

2.6.2.- DRAIN FORCE CONNECTION

This version of drain force allows an installation of the machine where the drain can be located 30 meters horizontally and 1.5 meters high from the machine's water outlet.

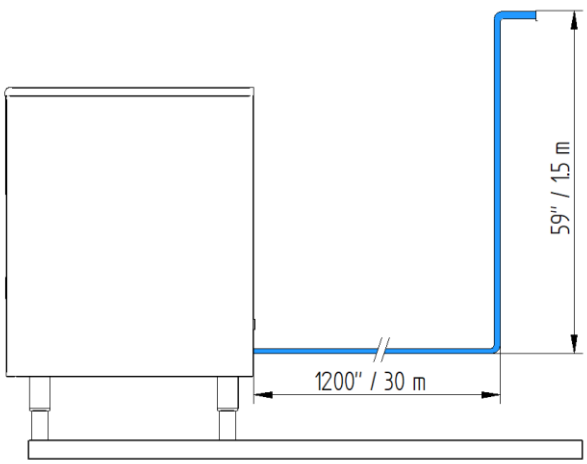

If the drain pipe runs incorrectly, the pump may not be able to drain the water, because the flow of the pump may be influenced due to the existence of stored air within the circuit.

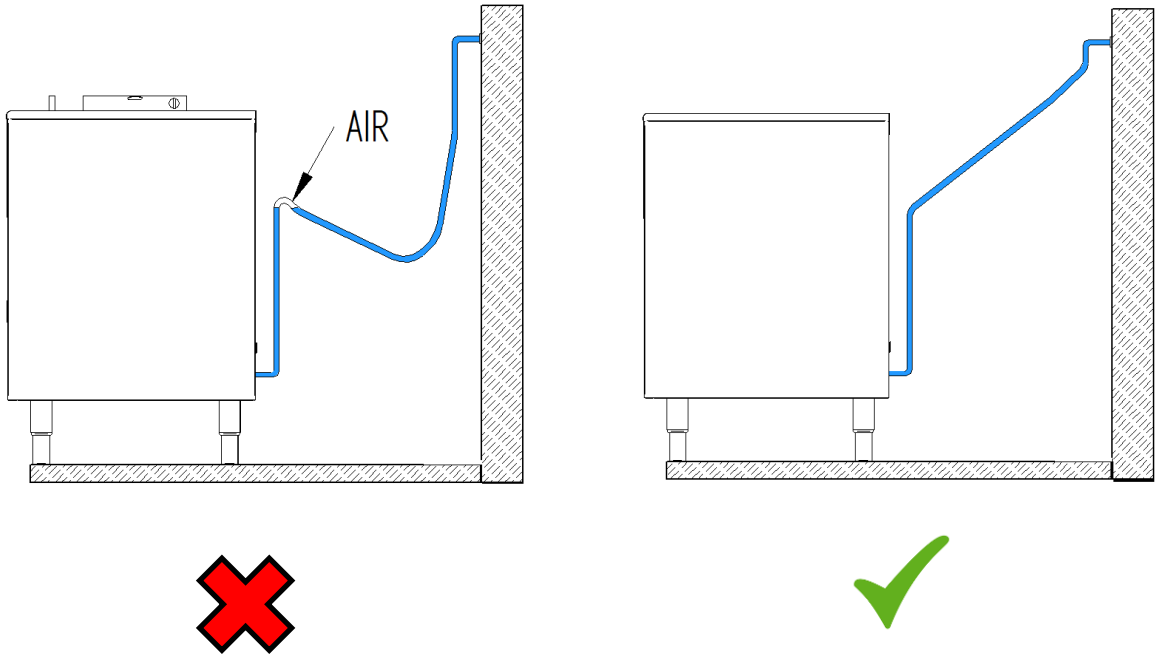

2.5.- ELECTRICAL CONNECTION

It is mandatory to ground the equipment. To avoid possible electric shock on individuals or damages to the equipment, the machine should be grounded pursuant local and/or national regulations as the case may be.

The manufacturer shall be held harmless in case of damages arising due to the lack of the ground installation.

In case the supply cable is damaged, it should be replaced by a cable of special assembly to be furnished by the manufacturer or after-sales service. Such replacement should be performed by qualified technical service only.

The machine should be places in such a way as to allow a minimum space between the back and the wall to allow an easy access and without risks to the cable plug.

Safeguard the socket. It is convenient to install adequate switches and fuses.

ATTENTION: The appliance requires an independent power supply of proper capacity. See the nameplate for electrical specifications. Failure to use an independent power supply of proper capacity can result in a tripped breaker, blown fuse, damage to existing wiring, or component failure. This could lead to heat generation or fire.

Voltage is indicated in the nameplate and on the technical specifications section of this manual. Variation on voltage above the 10% stated on the nameplate could result on damages or prevent the machine start-up.

3. *PRIOR CHECKING AND START-UP*

3.1.- PRIOR CHECKING

a) Is the machine leveled?

b) Voltage and frequency are the same as those on the nameplate?

c) Are the drains connected and operating?

d) Will the ambient temperature and water temperature remain in the following range?

	ROOM	WATER
MAXIMUM	43ºC	30ºC
MINIMUM	10ºC	10ºC

e) Is water pressure appropriate?

MINIMUM	0.1MPa (1 bar)
MAXIMUM	0.6 MPa (6 bar)

In case inlet water pressure is higher than 0.6 MPa, install a pressure regulator.

3.2.- START-UP

Once the installation instructions are followed (ventilation, site conditions, temperatures, water quality, etc.), proceed as follows:

1.- Open the water inlet. Verify the no existence of leakages.

2.- Open the door and remove the protection elements on the shield.

3.- Verify that the curtain moves freely.

4.- Connect the machine to the power supply.

5.- Push the switch on the machine front side.

6.- Verify that there are no vibrations or frictions on the elements.

7.- Close door (for under counter models) / Replace the front panel in its place (for modular models).

8.- Verify the ice cubs with the pictures below. If necessary, adjust production time switches (see table in 4.1, switches 1-4 (tf)) to make the ice cubes with the right shape.

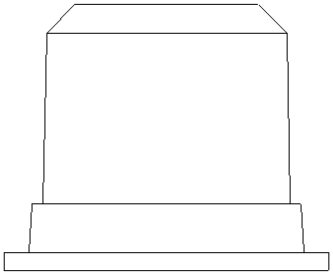

Too big

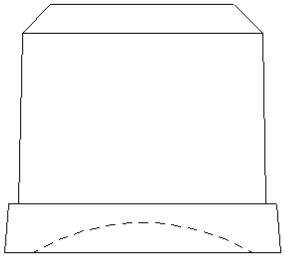

Just right

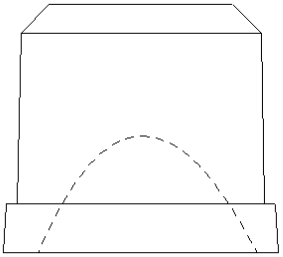

Too small

Damages due to the lack of maintenance and cleaning operations are not included on the warranty.

4. SEQUENCE OF OPERATION

Once you connect the machine there is a time delay of 140” during which the water valve is activated to ensure the water tray is filled. Compressor, pump will be off.

Once the time is up, it continues with a harvest cycle and the compressor starts.

After the harvest, the ice production starts, so the pump starts working. The pump, recirculates the water from the water tray to the upper nozzles (#2) distributor which provides a fan of water that waters each ice cube row in the evaporator (#1), in which the water starts freezing and making the ice.

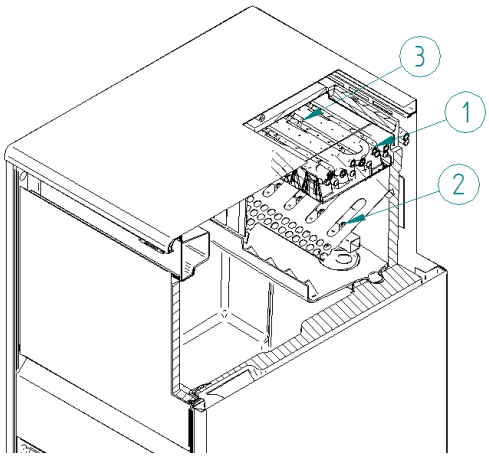

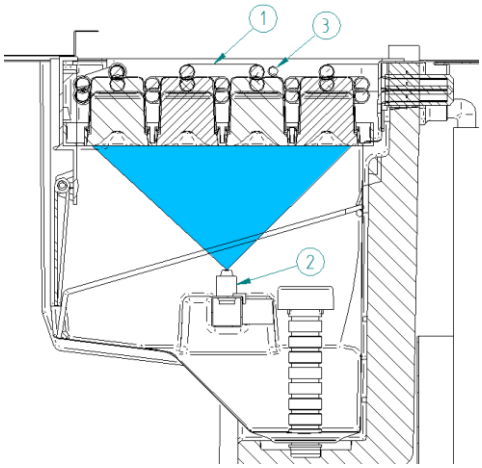

When the temperature probe (#3) at the end of the evaporator reaches an adjusted value **Tc (-12/-8°C)** , the fabrication continues the fixed time with the combination of dip-switches 1-4 (see table). This way we can ensure the filling of the ICE CUBE is correct in different working conditions.

Once the production time is over the harvest phase starts. The pump stops, the hot gas and the water inlet valves open. When the evaporator temperature probe (#3) reaches an adjusted value

<u>Tg (4/0°C)</u> the harvest continues the fixed time with the combination of dip-switches 5-7 (see table). Water is poured over the evaporator helping unstick the ice cubes from the plastic frame.

After the harvest cycle, the machine comes back to the production cycle.

At the beginning of each Harvest cycle, the PCB checks if the Thermostat is open or close. Once the ice bin is full and the ice cubes cover the thermostat tube (#4), the contact open, so when the harvest begins, the machine will stop until the contact of the thermostat close again. When it close, it starts with a harvest cycle and then it will continue with the production cycle again.

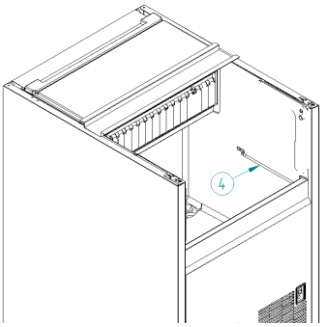

4.1. CONTROL BOARD

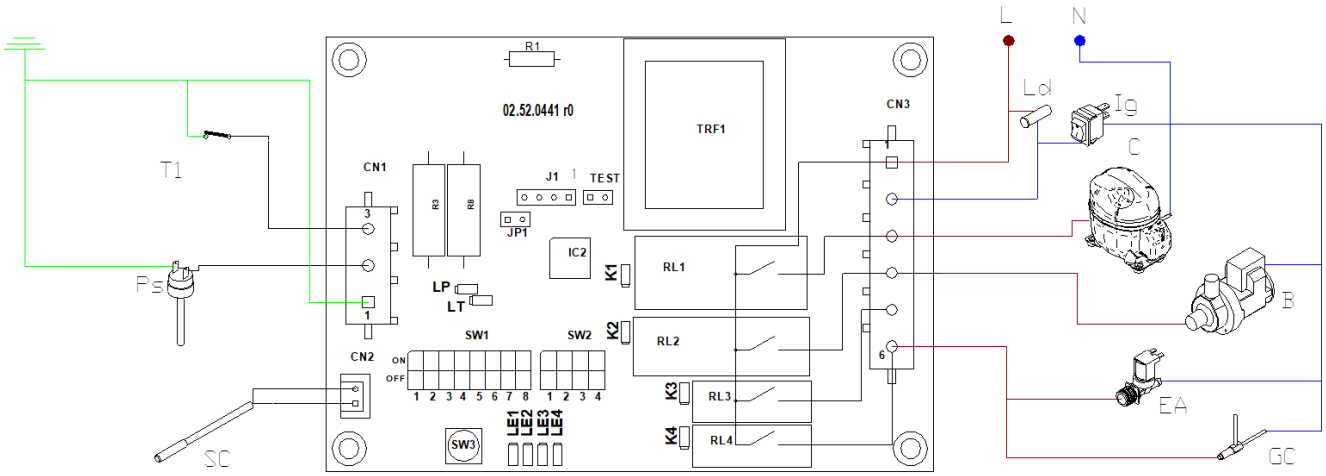

PCB connections	
Outputs	
C	Compressor
B	Water pump
EA	Water inlet valve
GC	Hot gas valve.
Inputs	
SC	Evaporator temperature NTC probe
P	Safety pressure switch
N	PCB push button
T1	Stock thermostat

LED signalling

Next to each out relay there is an orange led. Signals relay on

Next to each input terminal there is an orange led marking input active.

There are four additional red leds that signals machine status (continuous) or alarm (flashing)

Status signaling . Continuous led				
	LE1	LE2	LE3	LE4
Start up delay	X			
Ice cycle T>Tc	X	X		
Ice cycle T<Tc		X		
Harvest t<tg	X		X	
Harvest t>tg			X	
Full bin				X
Alarm signaling . Flashing led				
	LE1	LE2	LE3	LE4
Safety pressure switch	X			
Ice cycle timeout		X		
Harvest cycle timeout			X	

Faulty temperature probe				X

Dip switches setting

dip	Descripción (* factory setting)
1-4 (sw1-1/4)	tf - ice production timer. See table
5-7 (sw1-5/7)	tw - Water input timer. See table.
8 (sw1-8)	Tc - Evaporator temperature for timer start. ON=-12ºC / OFF=-8ºC
9 (sw2-1)	Tg (Hot valve temperature). ON=+4ºC / OFF=+0ºC
10 (sw2-2)	Safety high pressure switch trip function. ON= automatic reset (minimum stop 30 min.) OFF= manual reset (power OFF-ON)
11 (sw2-3)	Timeout alarms operation ON = activated OFF = unactivated
12 (sw2-4)	Software selection. **Always ON**

ICE / WATER TIMER SETTING								
SW1				TF (MIN)		SW1			TW (SEG)
1	2	3	4			5	6	7	
OFF	OFF	OFF	OFF	6		OFF	OFF	OFF	40
ON	OFF	OFF	OFF	8		ON	OFF	OFF	60
OFF	ON	OFF	OFF	10		OFF	ON	OFF	80
ON	ON	OFF	OFF	12		ON	ON	OFF	100
OFF	OFF	ON	OFF	14		OFF	OFF	ON	120
ON	OFF	ON	OFF	16		ON	OFF	ON	140
OFF	ON	ON	OFF	18		OFF	ON	ON	160
ON	ON	ON	OFF	20		ON	ON	ON	180
OFF	OFF	OFF	ON	22					
ON	OFF	OFF	ON	24					
OFF	ON	OFF	ON	26					
ON	ON	OFF	ON	28					
OFF	OFF	ON	ON	30					
ON	OFF	ON	ON	32					
OFF	ON	ON	ON	34					
ON	ON	ON	ON	36					

4.2.- ALARMS

They detect operational malfunctions. They are indicated with the flashing status Leds LE1-4. During some alarms a second operation retry attempt is carried out and if repeated again, the

machine will stop. Signaling should be indicated since the first failure occurs. If the second retry attempt is ok, the signaling will switch off.
In case that a machine stop has been caused by alarm, the reset is done by switching OFF and ON the main switch. If the dip-switch 11 OFF, time alarms are not to be followed.

4.2.1 SAFETY HIGH PRESSURE SWITCH

When the pressure contact (P) trips, instantly, all outputs switch over to off position.
When it is closed again, there are two possibilities:

- Dip-switch 10 OFF. Manual reset. The machine remains stopped until reset to Initial start-up.

- Dip-switch 10 ON. Automatic reset. The machine check pressure switch status every 30 min. When closed, the machine will continue at the position where it was.

* Signalling: Flashing LE1.

4.2.2 LONG HARVEST

If the harvest time is longer than 5 min., the harvest is interrupted, switching over to the production cycle. If the same happens again at the next harvest, the machine will stop.
* Signalling: Flashing in LE3.

4.2.3 ICE PRODUCTION CYCLE TIMEOUT

If during the production cycle, evaporator temperature probe has not reached the set temperature Tc in more than 60 min, the machine will stop until reset.

* Signalling: Flashing in LE2.

4.2.4 FAULTY TEMPERATURE PROBE

If PCB detects that evaporator temperature probe is broken or unconnected, the machine will stop

* Signalling: Flashing in LE4.

Probe type is NTC and resistance value must be 10kΩ at 25°C.

4.3 PCB PUSH BUTTON FUNCTION

Function depends on the unit status:

- Start up timer: Finish initial delay y passes to ice production stage

- Ice production. Switches to harvest

- Harvest. Switches to Ice production

<u>Wash cycle activation.</u>

Keep pressed the button while switching on main front switch. Wash cycle is activated and only the water recirculation pump is running. There is a maximum time for this cycle of 30 min. After this time, pump stops.

Wash cycle is finished by switching off main power.

Read cleaning and sanitizing instructions for proper usage of this function.

4.4 DRAIN FORCE

4.4.1 SEQUENCE OF OPERATION

While the machine is turn on, there is water that need to be evacuated between each cycle. There are 2 possible outlet water, one is if the ice in the storage bin melts (#1) and the other is when the production time ends, the water electrovalve opens and fills the water tray(#2) to renovate the water. The excess of water goes out by the overflow (#3) to the drain force water reservoir (#4).

When the water reservoir is full of water covering the 2 electrodes (#5), the pump (#6) turns on and evacuates water for 5 seconds. After 5 seconds, the pump turns off if the electrodes are not covered by the water, otherwise, the pump will start again for 5 seconds.

In case that the system does not work for any issue, the water will flood the ice bin. There is a ventilation tube (#7) that allows the system to remove any air that may remain in the water reservoir. The Vent tube must be always over the mouth of the front door (#8).

In case that the pump works for 5 min continuously, it will stop for 5 seconds automatically in order to refrigerate.

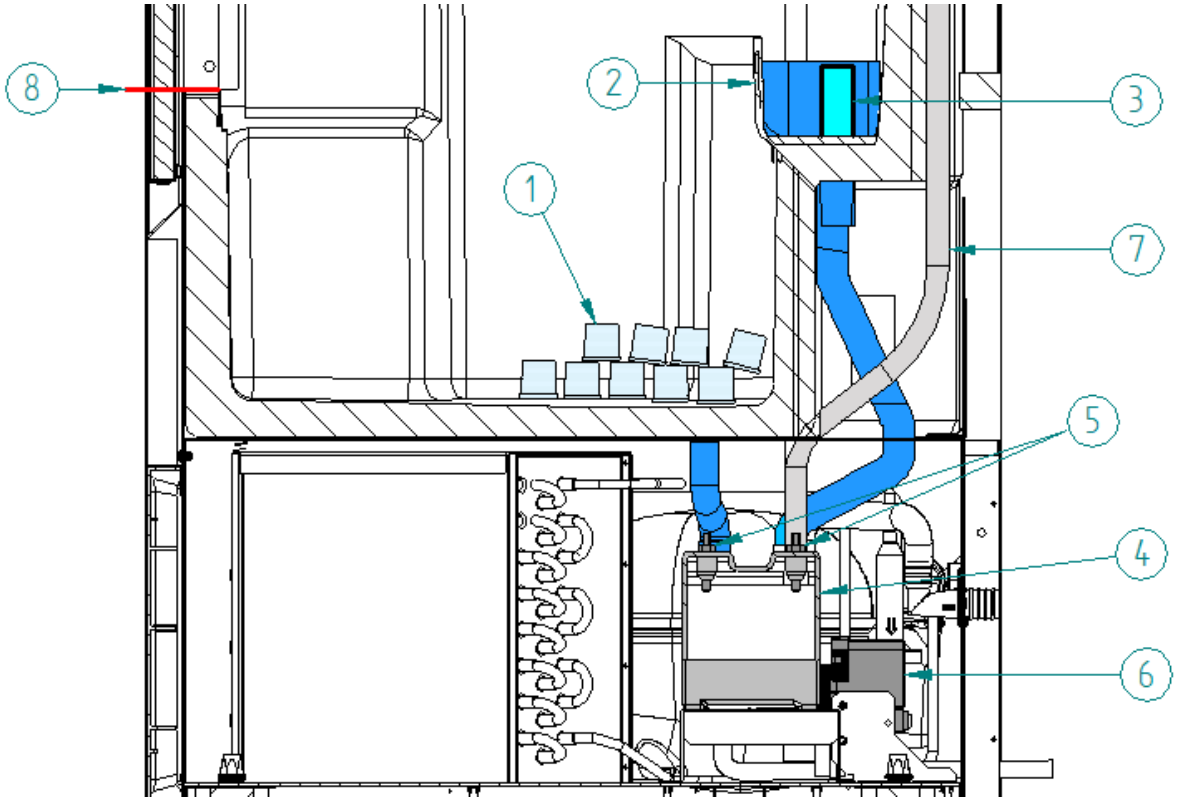

The system has a way to evacuate the water inside the water reservoir in a manual way. There is a plug(#9) in one of the plastic tube, by retiring this plug, it is possible to evacuate all the water.

Also, the system has a Check valve(#10) that does not allow the water to came back to the water reservoir.

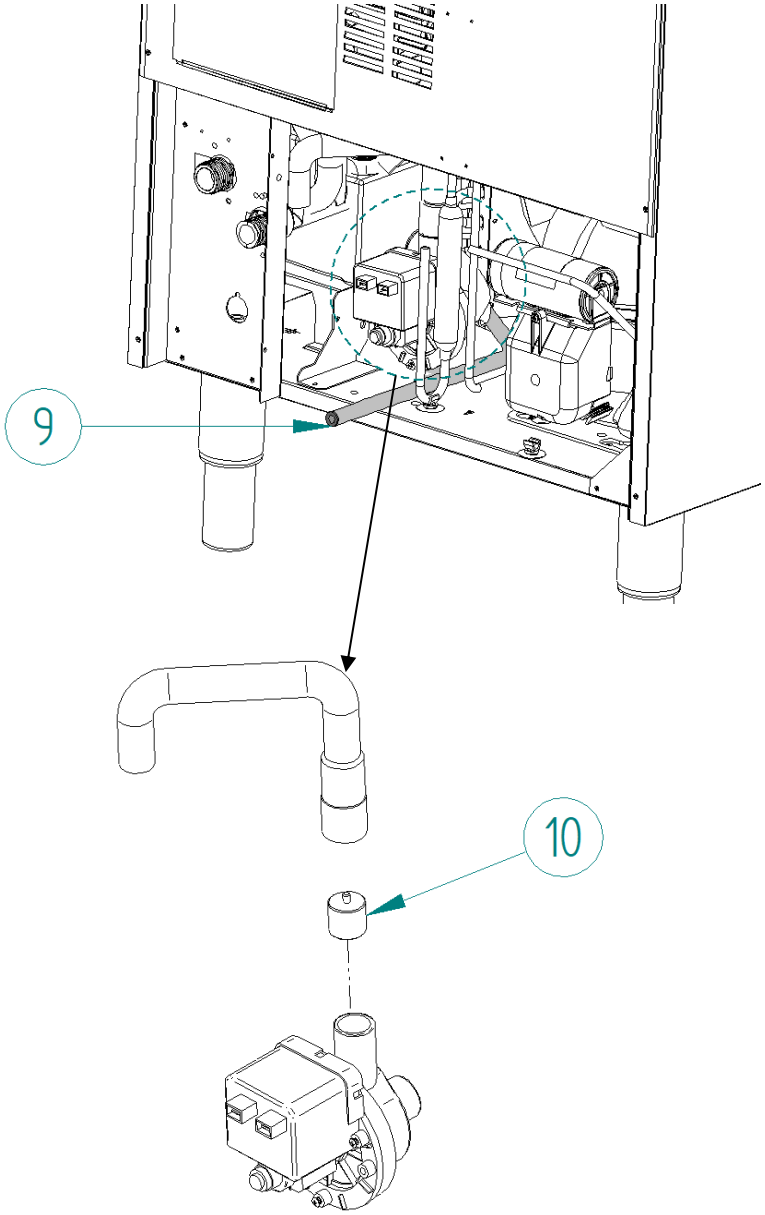

4.4.2 CONTROL BOARD

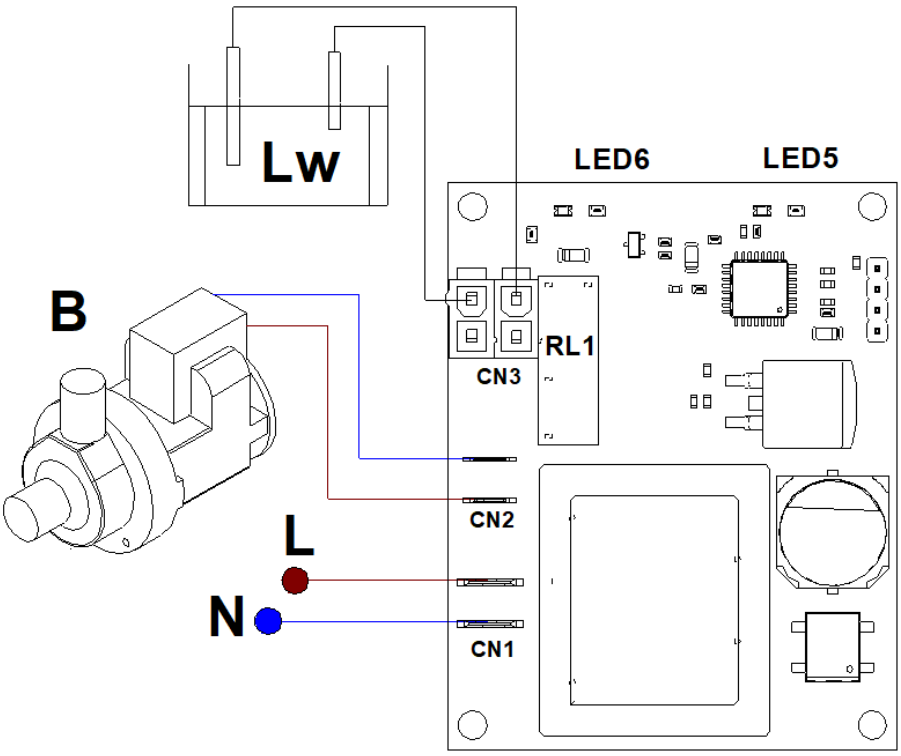

PCB connections	
Outputs	
B	Water pump
Inputs	
Lw	Water Level Sensor

LED signalling

There are two LEDs that signals machine status

Status signaling. Continuous led		
	LED5	LED6
PUMP RUNNING	X	
WATER LEVEL SENSOR ON		X

5 Refrigeration diagram

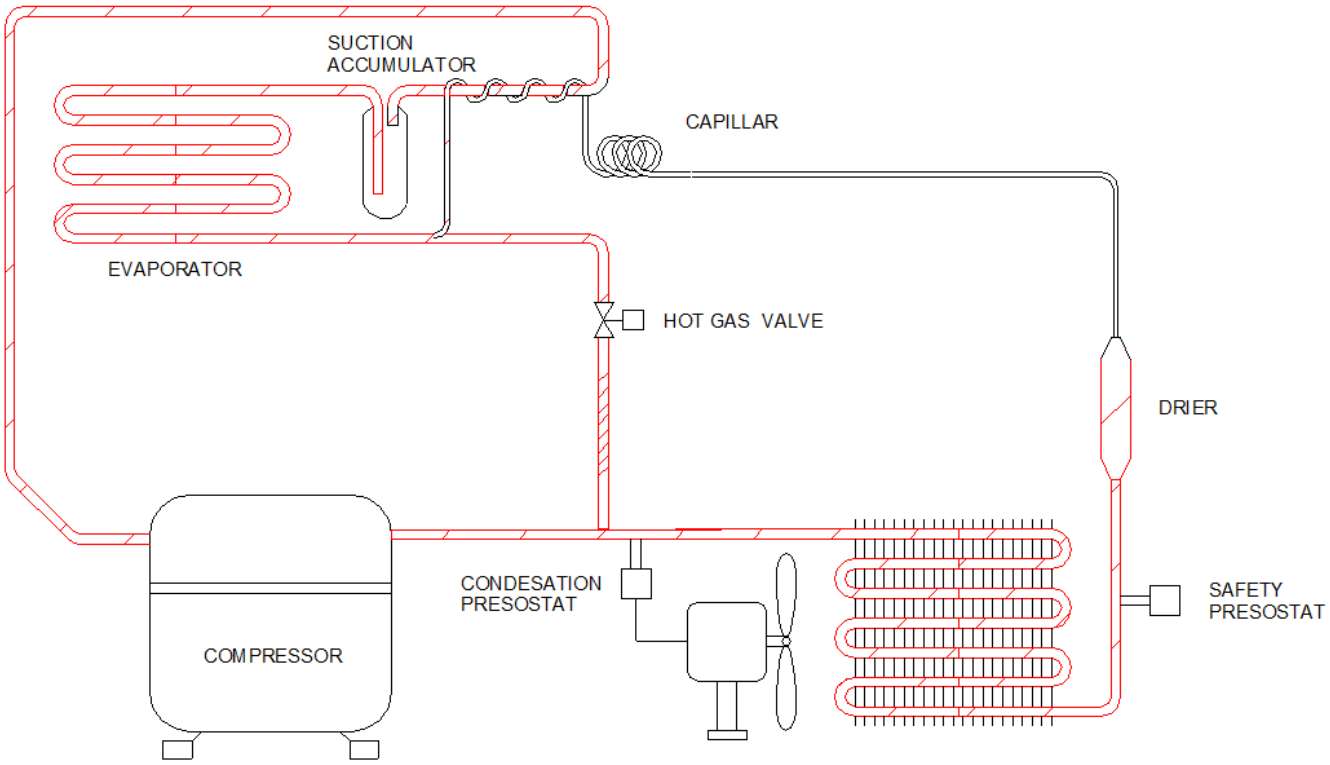

6 MAINTENANCE AND CLEANING PROCEDURES

It is the User's responsibility to keep the ice machine and ice storage bin in a sanitary condition. Ice machines also require occasional cleaning of their water systems with a specifically designed chemical. These chemical dissolves mineral build up that forms during the ice making process. Sanitize the ice storage bin as frequently as local health codes require, and every time the ice machine is cleaned and sanitized.

The ice machine's water system should be cleaned and sanitized at least twice a year.

CAUTION: Do not mix Ice Machine Cleaner and Sanitizer solutions together.

WARNING: Wear rubber gloves and safety goggles when handling Ice Machine Cleaner or Sanitizer.

WARNING: Unit should always be disconnected during maintenance/cleaning procedures.

6.1.- CLEANING WATER DISTRIBUTION SYSTEM

a) Set the switch to the OFF position after ice falls from the evaporator at the end of a harvest cycle or set the switch to the OFF position and allow the ice to melt off the evaporator.

CAUTION: Never use anything to force ice from the evaporator.

b) Remove all ice from the bin.

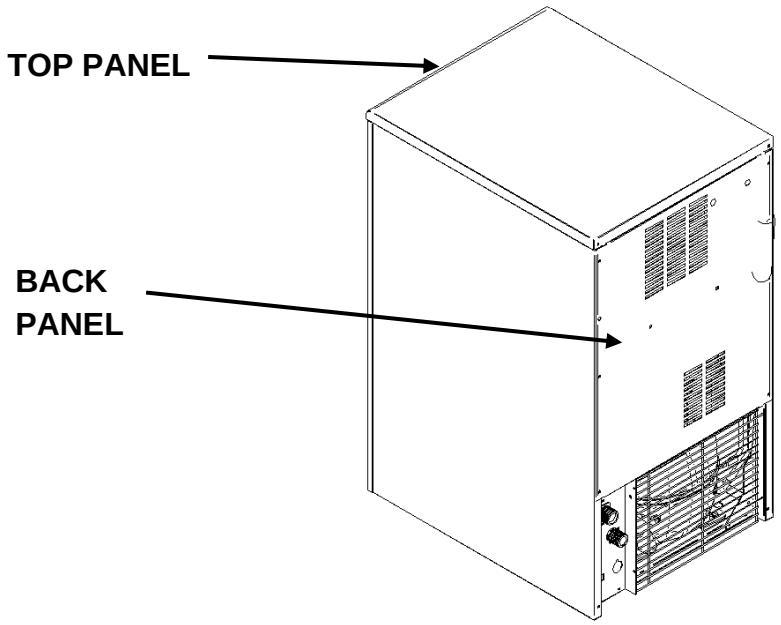

c) (ONLY NG30) Remove the back panel and the top panel. Remove the auxiliary pipe for drain operations near the pump and empty the water tray. Return it to their original position to avoid water spill.

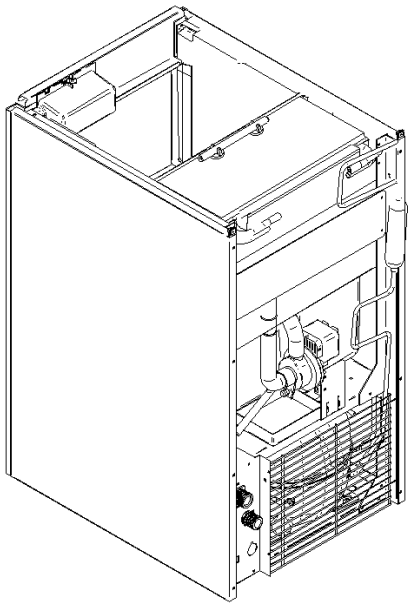

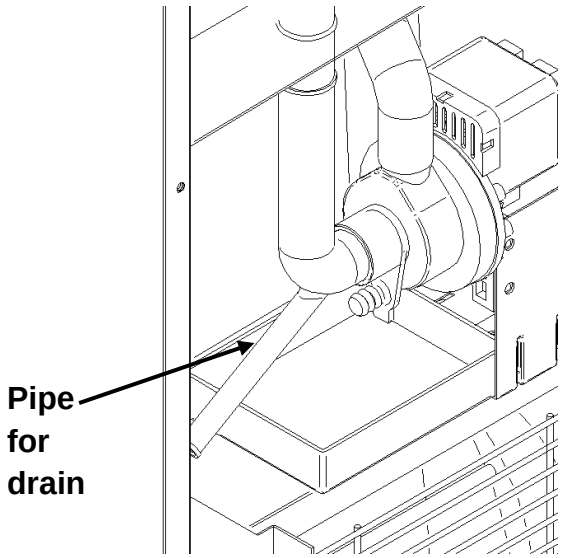

d) Remove the water overflow (#1) and empty the water tray (#2). Return it to their original position to avoid water spill.

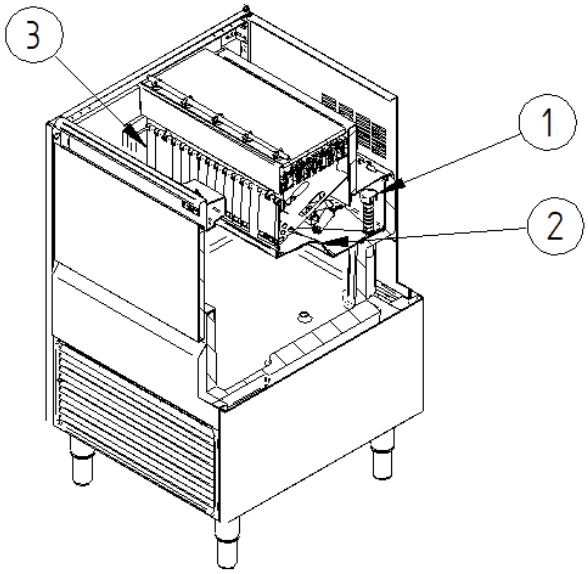

e) Prepare a solution of an appropriate product for the cleaning of ice machines (lime). Do not use hydrochloric acid. We recommend the use of any approved scale removal product prepared according to the manufacturer's instructions as for example Scale Kleen.

f) Fill water tray with the solution

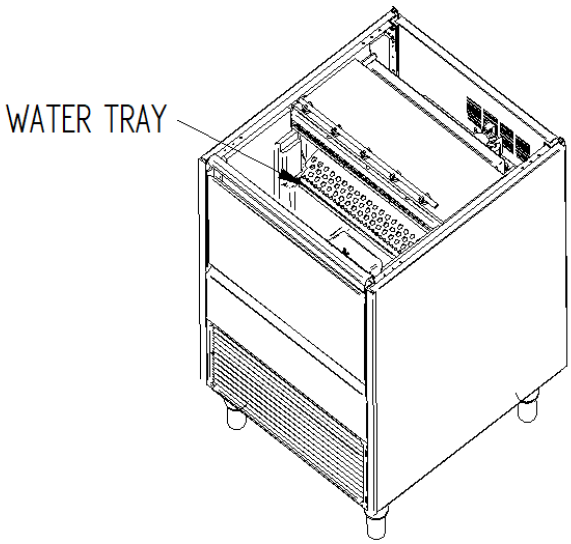

g) Disconnect power. Turn on the machine pushing SW3 (see picture). Let solution stand for 30-40 minutes and then switch off the machine. Disconnect power

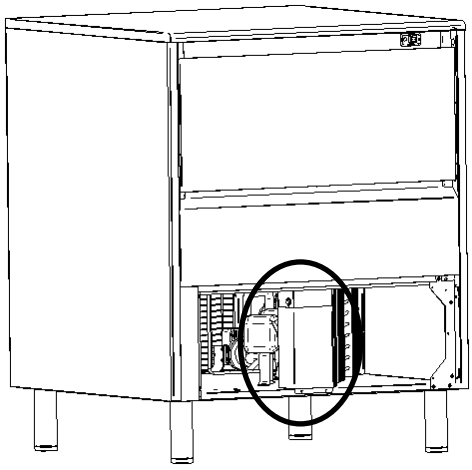

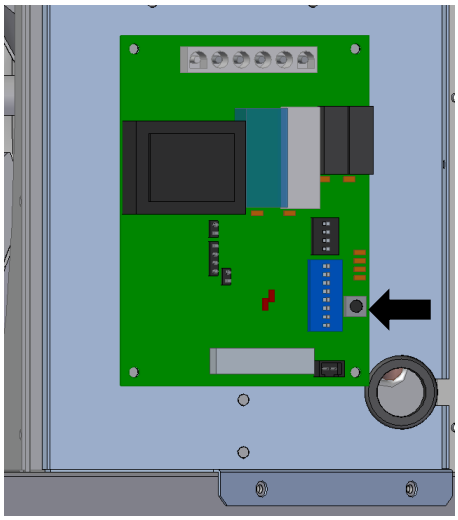

h) Disconnect power.

i) (ONLY NG30) Remove the auxiliary pipe to drain and purge out the ice machine scale remover and residue. Replace it.

j) Remove the water overflow (#1) and empty the water tray (#2). Return it to their original position to avoid water spill.

k) Mix enough cleaning solution (as in point **e**) to clean parts and interior food zone surfaces.

l) Clean all surfaces of the shield (#3) with the cleaner solution using a brush (not a wire

brush) or cloth. Rinse all areas with water.

m) Clean all the interior surfaces of the freezing compartment (including storage bin) with the cleaner solution using a brush or cloth. Rinse all areas with water.

n) Mix a solution of sanitizer using approved (EPA/FDA) sodium hypochlorite food equipment sanitizer to form a solution with 100 - 200 ppm free chlorine yield. Below an example to calculate the proper quantity of sanitizer to add to the water, for a household bleach 12,5%:

$$\text{bleach to add} \Rightarrow \frac{15}{\%\text{dis}} = \frac{15}{12.5} = 1.2\ \text{gr/L} \rightarrow *0.133 = 0.16\ \text{oz/gal}$$

o) Sanitize all the interior surfaces of the freezing compartment (including the storage bin) applying liberally sanitizer solution, using a cloth or sponge.

p) Connect power and water supplies.

q) Fill water reservoir with the sanitizer solution.

r) Switch on machine in order to run water pump. Let solution stand for 20 minutes and switch off.

s) (ONLY NG30) Remove the auxiliary pipe to drain and purge out the sanitizer solution and residue. Replace it.

t) Remove the water overflow (#1) and empty the water tray (#2). Return it to their original position to avoid water spill.

u) Fill the water reservoir with water and switch on the machine to allow water to circulate for 5 minutes and then stop the machine. Repeat this operation two more times to rinse thoroughly.

v) Remove the auxiliary hose to drain the water. Replace it and fill the tray with water to ensure the pump works properly.

w) (ONLY NG30) Return the back metal lid and the top panel to their position.

x) Switch on machine and discard the first two harvests.

6.2.- CLEANING WATER DISTRIBUTOR AND INJECTORS

1) Remove the curtain (#4). (Take advantage to clean it with Calklin or some non-aggressive product, rinse, clean with bleach and rinse under the tap).

2) Remove the ice fall grill (#3). (Clean it just like the curtain).

3) PULL UP THE COLLECTOR (#1) (IT IS PRESSURE MOUNTED)

4) Remove the nozzles (#3) and the manifold covers, clean them.

5) Remove and clean the main suction filter (#5) of the pump. (IT IS PRESSURE MOUNTED)

6) Fit filter, injectors, and collector.

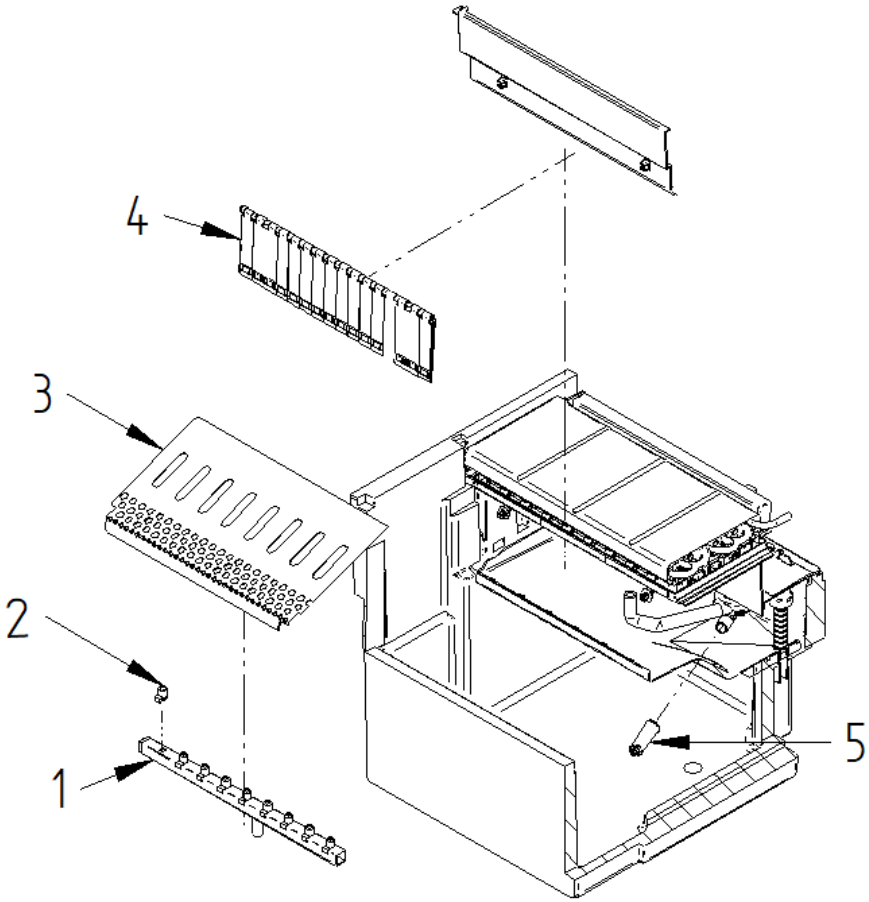

ATTENTION: IT IS VERY IMPORTANT, WHEN REPLACING THE MANIFOLD THAT THE INJECTORS ARE COMPLETELY PERPENDICULAR TO THE SAME. IF THE CUBES AT THE END ARE TWISTED, THEY CAN REMAIN WITHOUT WATER.

6.3.- CLEANING THE BINS

1) Disconnect the machine, close water faucet and empty storage bin of ice
2) Use the cleaner/water solution to clean all surfaces of the bin. Use a nylon brush or cloth. Then rinse all areas thoroughly with clean water.
3) Use the sanitizer/water solution to sanitize all surfaces of the bin. Use a nylon brush or cloth.
4) Rinse with plenty of water, dry, run the machine and open water faucet.

6.4.- CLEANING THE CONDENSER

AIR CONDENSER

1) Disconnect machine and close water faucet.

2) Remove the screw from the ventilation grille, press the tabs to take out the grille, then remove the air filter and clean it using a vacuum cleaner equipped with a brush, a non-metallic brush, or low-pressure air.

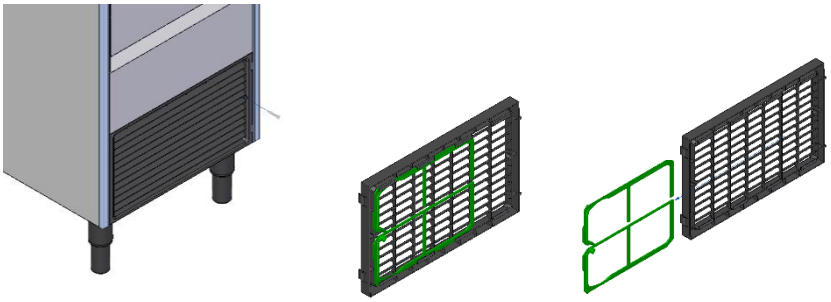

3) Clean condenser using a vacuum cleaner, soft brush or low pressure air. Clean from top to bottom, not side to side. Be careful not to bend the condenser fins.

WATER CONDENSER

The water condenser may require cleaning due to scale build-up. The cleaning procedures require special pumps and cleaning solutions. They must be performed by qualified maintenance or service personnel.

6.5.- EXTERNAL CLEANING OF THE MACHINE

Clean the area around the ice machine as often as necessary to maintain cleanliness. Sponge any dust and dirt off the outside of the ice machine with mild soap and water. Wipe dry with a clean soft cloth. A commercial grade stainless steel cleaner/polish can be used as necessary.

6.6.- WATER LEAKAGE CHECKING

This must be done whenever maintenance is carried out on the machine: check all water connexions, braces, tubes and hoses in order to eliminate leaks and prevent breakages and flooding.

6.7.- MAINTENANCE TABLE

PROCEDURE	MONTHLY	QUARTERLY	HALF YEARLY	YEARLY	BIENNIAL	DURATION
Air condenser cleaning	✷✷✷	✷✷✷	■ ■ ■	■ ■ ■	■ ■ ■	30 minutes
Water condenser cleaning				▯▯▯	■ ■ ■	90 minutes
Inyectors cleaning		▯▯▯	▯▯▯	■ ■ ■	■ ■ ■	30 minutes
Fabrication head filter cleaning			▯▯▯	■ ■ ■	■ ■ ■	30 minutes
Water circuit cleaning		▯▯▯	▯▯▯	■ ■ ■	■ ■ ■	45 minutes
Sanitary cleaning		▯▯▯	▯▯▯	■ ■ ■	■ ■ ■	30 minutes
Water filter cleaning/replacement	▯▯▯	▯▯▯	■ ■ ■	■ ■ ■	■ ■ ■	30 minutes
General unit cleaning	◈◈◈	◈◈◈	◈◈◈	◈◈◈	◈◈◈	--

✷✷✷ Depending on room characteristics
▯▯▯ Depending on water quality
◈◈◈ Carried out by owner

■ ■ ■ Essential

Maintenance and cleaning procedures as well as problems derived from failing to carry them out **ARE NOT COVERED BY THE WARRANTY.** Service personnel will invoice you for travel expenses, time invested and materials required for maintenance and cleaning of unit.

7 USER TROUBLESHOOTING GUIDE

7.1. GENERAL QUESTIONS

PROBLEM		POSSIBLE CAUSES	SOLUTION
None of the electrics work. Front switch ON but pilot is OFF		The machine is not plugged in.	Plug the machine and verify socket power
None of the electrics work. Front pilot is ON		Full bin status (LE4 on) with no ice. Faulty or bad adjusted thermostat	Adjust / replace
		PCB alarm.	Check led code
PCB alarms. See point 4.2			
High pressure switch		Dirty condenser	Clean condenser
		Defective fan	Check. Replace
		Defective safety / cooling switch	Check. Replace
NTC probe error		Defective probe	Check. Replace
		Defective probe plug connection	Check
Ice cycle timeout		No frozen evaporator	Check refrigeration system
		NTC probe faulty contact	Check probe fitting
Harvest cycle timeout		Faulty hot gas valve/coil	Check. Replace
		Harvest do not happen	Check water inlet strainer
Wrong cycle sequence		Dip-switch 2-4 OFF	Set ON
White and partially formed cubes. Not uniform nozzles spray		Dirty nozzles	Clean / replace
		Dirty suction filter	Clean
		Lack of water at cycle´s end	Check water leaks Check water inlet strainer
No water at nozzles		No water input	Check supply and water valve operation
		Faulty pump	Check / replace
		Overflow pipe out of place or leaking	Check tube and o-ring
Too large cubes		Freezing time too large	Adjust by dip-switches
		Probe makes bad contact	Position well
Too small cubes	Uniform	Freezing time too short	Adjust by dip-switches
		Low refrigeration performance	Check refrigeration system
	Not Uniform	Poor refrigerator performance	
Not all cubes are released		Harvest time too short	Adjust by dip-switches
		Freezing time too large (Ice slab)	Adjust by dip-switches
		Faulty hot gas valve	Check / replace
		Lack of water input	Check net pressure and input filters
		Faulty fan pressostat (non stop)	Check / replace
Low ice production		Blocked condenser or air access to condenser	Clean condenser; improve air circulation
		Faulty hot gas valve, doesn't close totaly.	Replace
		Low performance refrigeration system	Check
All the electrics work except compressor.		Faulty contact.	Check wiring.
		Faulty relay .	Replace relay.
		Faulty "Klixon".	Replace Klixon.
		Faulty compressor.	Replace compressor.
All the electrics work but the compressor "klixons" (cycles intermitenttly).		Voltage too low.	Check voltage.
		Obstruction in air circulation.	Move machine to a correct position.
		Start / run capacitor faulty.	Replace condenser.
		Cooling presostat faulty or wrongly adjusted.	Replace or adjust presostat.

7.2. DRAIN FORCE

The bin is flooded	**The check valve is blocked**	**Clean or Replace it**
	The pump is broken	**Replace it**
	The electrodes do not detect water	**Disassemble and clean, if problem persist, replace it**
The pump is always turn on	**The electrodes detect water even if there is no water**	**Disassemble and clean the electrodes**

8 TECHNICAL DATA

WIRING DIAGRAM

To see the wiring diagram, please the following QR code or click the link:

NG MODEL

https://n9.cl/veaqi

MR 400

https://n9.cl/lnyu

OTHER TECHNICAL INFORMATION

For more technical information scan the following QR code or click the link:

- Specification sheets
- User manual
- Exploded views
- CAD / REVIT drawings
- Technical videos

https://n9.cl/5m2cj