P-003357v01
03/10/2024

ESQUEMA ELECTRICO / WIRING DIAGRAM

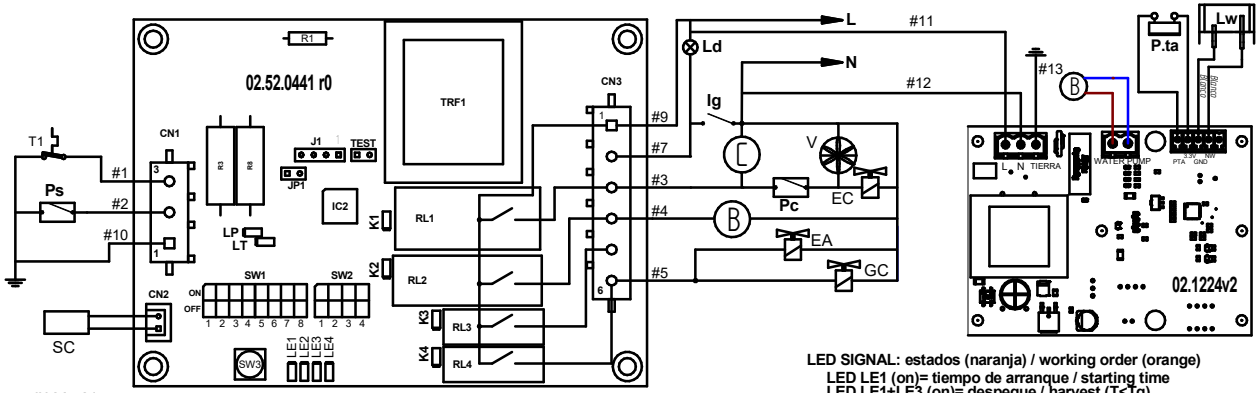

#1 black/ negro
#2 white / blanco
#3 red / rojo
#4 orange / naranja
#5 violet / violeta
#6 ground / verde-amarillo
#7 blue/ azul
#8 grey/ gris
#9 brown/ marrón
#10 Yelow / amarillo
#11 brown / marrón
#12 blue / azul
#13 ground / verde-amarillo

SC.-Sonda de Ciclo / Harvest Assist Probe
T1.-Termostato de stock / Bin Sensor
EA.-Electroválvula entrada agua / Water Inlet electrovalve
GC.-Electroválvula de gas caliente / Hot gas/Harvest electrovalve
C.-Compresor / Compressor
B.-Bomba de agua / Water Pump
Ps.-Presostato Seguridad / High Pressure cut out
V.-Ventilador (solo condensación aire) / Fan (only air condensation)
EC.-Electroválvula de condensación / Condensation electrovalve
(solo condensacion agua) (only water condensation.)
Ig.-Interruptor general / Power Switch
Pc.-Presostato Condensación Ventilador / Fan Control Switch
P.ta.-Sensor de apertura de puerta / Door opening sensor
Lw.-Sonda de nivel de agua / Water level probe

LED SIGNAL: estados (naranja) / working order (orange)
LED LE1 (on)= tiempo de arranque / starting time
LED LE1+LE3 (on)= despegue / harvest (T<Tg)
LED LE3 (on) = despegue / harvest (T>Tg, t=td)
LED LE1+LE2 (on) = fabricación / production (T>Tc)
LED LE2 (on) = fabricación / production (T<Tc, t=tf)
LED LE4 (on)= almacén lleno/ full stock

LED SIGNAL: alarmas (naranja intermitente: máquina apagada) / warning (flashing orange: machine off)
LED LE1 = Presostato seguridad abierto / High Pressure cut out
LED LE2 = tiempo fabricación máximo (t>60min para T=Tc) / production timeout (t>60min for T=Tc)
LED LE3 = tiempo despegue máximo (t>5min para T=Tg) / harvest timeout (t>5min for T=Tg)
LED LE4 = error de sonda de ciclo / cycle temp. probe error